WM-EX621

SERVICE MANUAL

Ver 1.0 2001. 10

AEP Model
UK Model
E Model
Chinese Model
Tourist Model

Manufactured under license from Dolby Laboratories Licensing Corporation.
"DOLBY" and the double-D symbol ꟷ are trademarks of Dolby Laboratories Licensing Corporation.

Model Name Using Similar Mechanism	WM-EX610
Tape Transport Mechanism Type	MT-WMEX610-162

SPECIFICATIONS

Frequency response
Playback: 30 - 18 000 Hz

Output
Headphones (🎧 jack)
Load impedance 8 - 300 Ω

Power requirements
1.5 V
Rechargeable battery
One R6 (size AA) battery

Dimensions (w/h/d)
Approx. 77.1 × 108.0 × 20.5 mm

Mass
Approx. 158 g

Supplied accessories
- Battery case (1)
- Stereo headphones or earphones with remote control (1)
- Battery charger (1)
- Rechargeable battery (NC-6WM, 1.2 V, 600 mAh, Ni-Cd) (1)
- Carrying pouch (1)
- Rechargeable battery carrying case (1)

Design and specifications are subject to change without notice.

CASSETTE PLAYER

9-873-318-01
2001J1600-1
© 2001.10
Sony Corporation
Personal Audio Company
Published by Sony Engineering Corporation

SONY®

Downloaded from www.Manualslib.com manuals search engine

TABLE OF CONTENTS

1. **SERVICE NOTE** ········· 3

2. **GENERAL** ········· 5

3. **DISASSEMBLY**
   - 3-1. CASE SUB ASSY ········· 7
   - 3-2. MAIN BOARD ········· 8
   - 3-3. BELT (F4) ········· 8
   - 3-4. MOTOR (CAPSTAN/REEL) (M901) ········· 9
   - 3-5. LID ASSY, CASSETTE ········· 9
   - 3-6. ORNAMENT, REEL ········· 10
   - 3-7. HOLDER (FS) ASSY ········· 10
   - 3-8. LEVER (N)/(R) ASSY, PINCH ········· 11
   - 3-9. HEAD, MAGNETIC (HP901) ········· 11

4. **MECHANICAL ADJUSTMENT** ········· 12

5. **ELECTRICAL ADJUSTMENT** ········· 12

6. **DIAGRAMS**
   - 6-1. BLOCK DIAGRAM ········· 13
   - 6-2. NOTE FOR PRINTED WIRING BOARDS AND SCHEMATIC DIAGRAMS ········· 14
   - 6-3. IC BLOCK DIAGRAMS ········· 14
   - 6-4. SCHEMATAC DIAGRAM – MAIN BOARD – ········· 15
   - 6-5. PRINTED WIRING BOARD – MAIN BOARD – ········· 16
   - 6-6. IC PIN FUNCTION ········· 17

7. **EXPLODED VIEWS**
   - 7-1. CABINET BLOCK ········· 19
   - 7-2. MAIN BOARD BLOCK ········· 20
   - 7-3. MACHANISM BLOCK – 1 ········· 21
   - 7-4. MACHANISM BLOCK – 2 ········· 22

8. **ELECTRICAL PARTS LIST** ········· 23

Notes on chip component replacement

- Never reuse a disconnected chip component.
- Notice that the minus side of a tantalum capacitor may be damaged by heat.

Flexible Circuit Board Repairing

- Keep the temperature of soldering iron around 270˚C during repairing.
- Do not touch the soldering iron on the same conductor of the circuit board (within 3 times).
- Be careful not to apply force on the conductor when soldering or unsoldering.

Unleaded solder

Boards requiring use of unleaded solder are printed with the lead free mark (LF) indicating the solder contains no lead.
(Caution: Some printed circuit boards may not come printed with the lead free mark due to their particular size.)

: LEAD FREE MARK

Unleaded solder has the following characteristics.

- Unleaded solder melts at a temperature about 40°C higher than ordinary solder.
  Ordinary soldering irons can be used but the iron tip has to be applied to the solder joint for a slightly longer time.
  Soldering irons using a temperature regulator should be set to about 350°C.
  Caution: The printed pattern (copper foil) may peel away if the heated tip is applied for too long, so be careful!
- Strong viscosity
  Unleaded solder is more viscous (sticky, less prone to flow) than ordinary solder so use caution not to let solder bridges occur such as on IC pins, etc.
- Usable with ordinary solder
  It is best to use only unleaded solder but unleaded solder may also be added to ordinary solder.

与安全有关的零部件须知

在原理图上用阴影及 ⚠ 标记来识别的零部件在安全操作上是具有关键性的。这些零部件要用本手册中所示的部件号对应的索尼零部件进行更换。

在安全操作上具有关键性的电路调整与索尼公司出版的维修手册完全一致。在更换关键零部件时或怀疑动作失常时，请进行这些调整操作。

SAFETY-RELATED COMPONENT WARNING!!

COMPONENTS IDENTIFIED BY MARK ⚠ OR DOTTED LINE WITH MARK ⚠ ON THE SCHEMATIC DIAGRAMS AND IN THE PARTS LIST ARE CRITICAL TO SAFE OPERATION. REPLACE THESE COMPONENTS WITH SONY PARTS WHOSE PART NUMBERS APPEAR AS SHOWN IN THIS MANUAL OR IN SUPPLEMENTS PUBLISHED BY SONY.

Downloaded from www.Manualslib.com manuals search engine

SECTION 1
SERVICE NOTE

[Service Mode]

The service mode enables to operate the mechanism of WM-EX621 while the MAIN board is opened.
Rotation of the idler gear (A) (S side) is detected using the photo-reflector (PH701) in the WM-EX621. PH701 is located on the MAIN board, therefore the rotation of the idler gear (A) (S side) cannot be detected by PH701 when the MAIN board is removed. As a result, the motor cannot be controlled and cannot run correctly.
To repair the machine after the MAIN board is removed while the main power is turned on, follow the procedures as described below.

1. Setting

1) Remove the cabinets referring to section "3. DISASSEMBLY". Open the MAIN board.
2) Connect the motor (M901) and the plunger solenoid (PM901) to the MAIN board using the jumper wires. When the extension jig (1-769-143-11) (10 wires as a set) is used, they can be connected easily.
3) Short the TAPE DETECT switch (S901-1) and the ATS switch (S901-2).
4) Connect an AF oscillator to TP53 (P. IN) and TP14 (GND).
5) Connect DC 1.3 V from external regulated power supply to ⊕ and ⊖ terminals of the battery.

2. PRE-SET status

The PLAY, FF and REW modes can be entered only from the PRE-SET status.

1) Check that the slider (NR) is in the center position (S701), and the FWD/REV switch is also in the center position. When these switches are not in the center position, set them to the PRE-SET status as follows.
2) Move the FWD/REV switch (S701) to the same position as the slider (NR) is set.
3) The slider (NR) can be moved when the main power of the regulated power supply is turned OFF once then back ON. Move the FWD/REV switch (S701) to the center position in synchronism with the timing when the slider (NR) is moved.

3. FF, REW modes

1) Check that the PRE-SET status is set.
2) Connect square wave or sine wave to TP53 (P. IN) and TP14 (GND). (See illustration below)
3) Press the ■ switch (S702) to enter the STOP mode.
4) Press the AMS switch (S704).

4. PLAY mode

1) Check that the PRE-SET status is set.
2) Connect square wave or sine wave to TP53 (P. IN) and TP14 (GND). (See illustration below)
3) Press the ■ switch (S702) to enter the stop mode.
4) When the ◀▶ switch (S703) of the MAIN board is pressed, the slider (N/R) moves once to the F side then moves to the R side. When the FWD/REV switch (S701) is pressed in the synchronism with the above timing, the machine can enter the PLAY (R side) mode. Press the ◀▶ switch (S703) again, and move the FWD/REV switch (S701) in the synchronism with the motion of slider (NR). It enables the machine to enter into the PLAY (F side) mode.

Note 1: When you fail to enter the PLAY mode, re-start from step 2) PRE-SET status.
Note 2: Regarding the ◀▶ (S703), ■ (S702), AMS (S704) switches, use these switches of the remote control unit as much as possible.
Note 3: If a headphones are used, the beep sound shows the timing of the FWD/REV switch (S701).

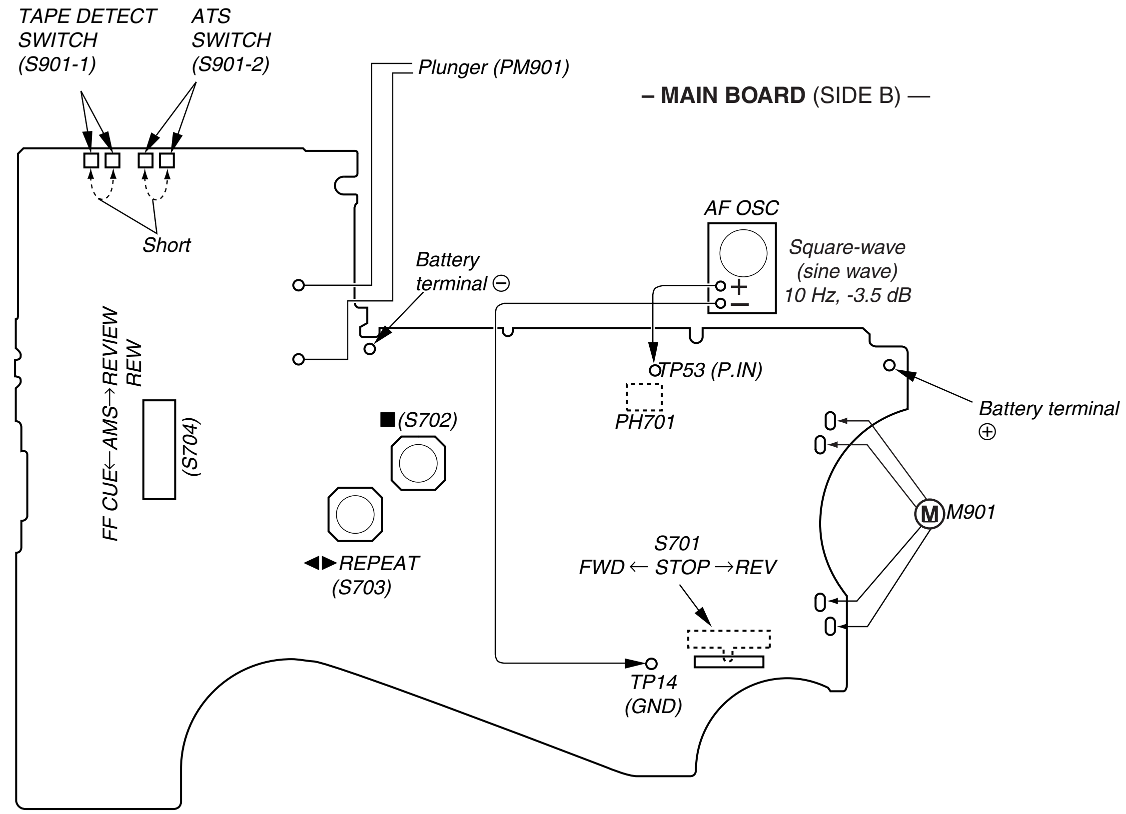

Downloaded from www.Manualslib.com manuals search engine

[Slider (NR)]

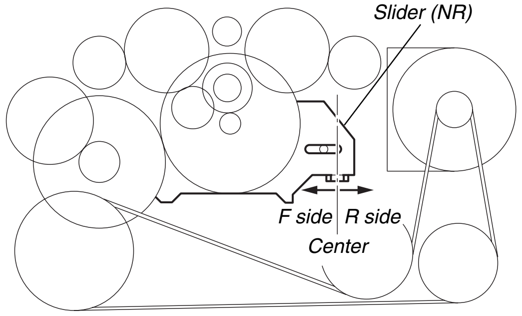

[Tape drive mechanism]

Tape drive mechanism in PLAY mode

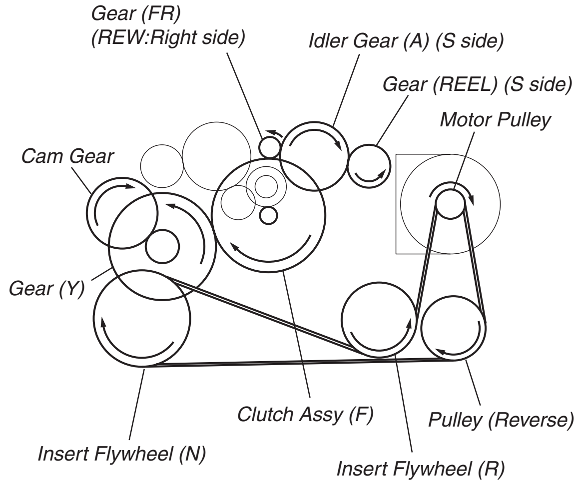

Tape drive mechanism in FF mode

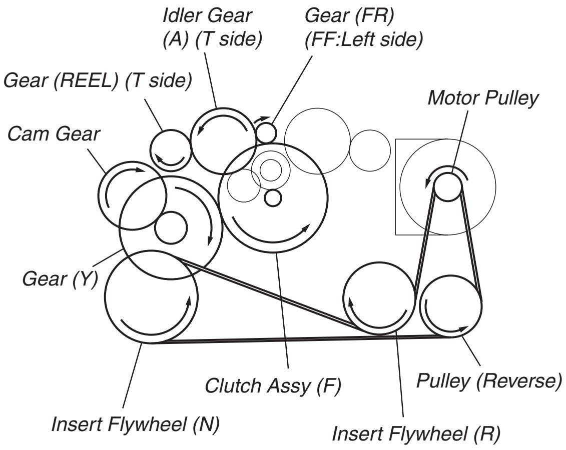

Tape drive mechanism in REW mode

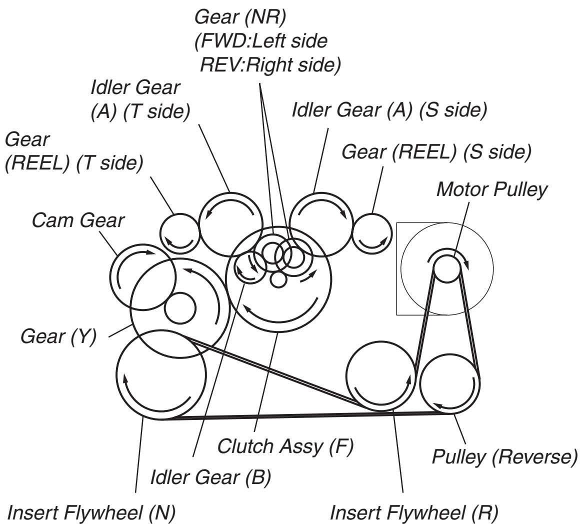

Downloaded from www.Manualslib.com manuals search engine

This section is extracted from instruction manual.

SECTION 2
GENERAL

A

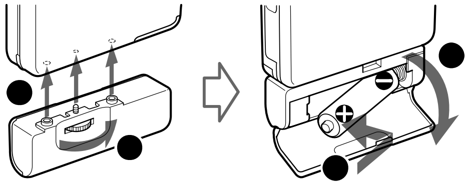

C

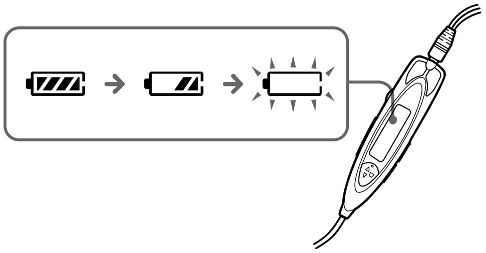

B

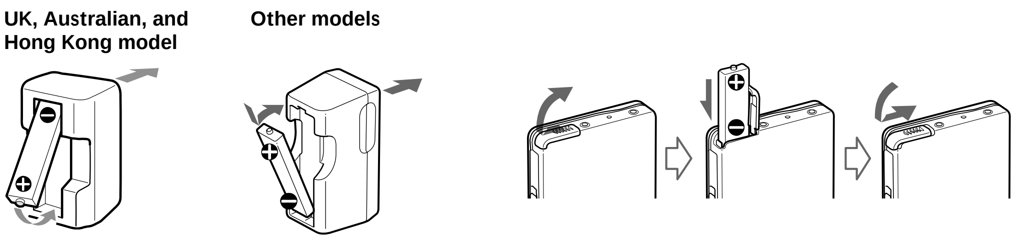

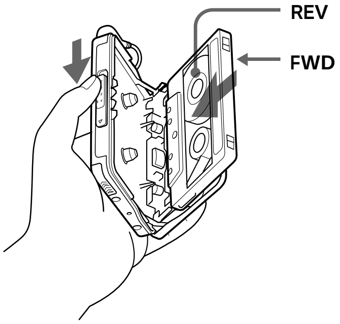

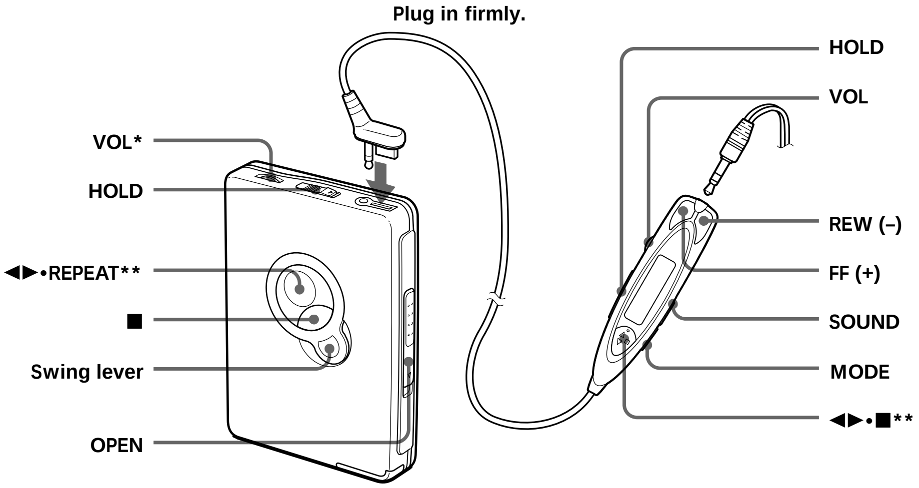

* There is a tactile dot beside VOL on the main unit to show the direction to turn up the volume.
** The button has a tactile dot.

Downloaded from www.Manualslib.com manuals search engine

Preparations

Prepare a dry battey (not supplied) or the rechargeable battery (supplied).

Dry Battery A

Attach the supplied battery case, and then insert one R6 (size AA) battery with correct polarity.

Note
- For maximum performance we recommend that you use a Sony alkaline battery.

Rechargeable Battery B

1 Insert the supplied rechargeable battery (NC-6WM) into the charger with correct polarity.
2 Plug in the charger to the house current (mains).
UK, Australian, and Hong Kong model: Full charging takes about 3.5 hours.
U.S.A., Canada, European Continent and Saudi Arabian model: Full charging takes about 2.5 hours.
Korean model: The full charging time depends on the voltage of your mains.
110 V: 10 hours
220 V: 2.5 hours
Other models: The full charging time depends on the voltage of your mains.
120 V: 10 hours
220 – 240 V: 2.5 hours
3 Insert the fully charged battery into the rechargeable battery compartment.

You can charge the battery about 300 times.

When to replace/charge the battery C

Replace or charge the battery when "▭" flashes in the display on the remote control.

Note
- After the battery is replaced, the setting of the SOUND and MODE buttons will be erased.

Playing a Tape

1 Insert a cassette and if the HOLD function is on, slide the HOLD switch in the opposite direction of the arrow to unlock the controls.
2 Press ◀▶(play)•■(stop) on the remote control and adjust the volume with VOL. (On the main unit, press ◀▶•REPEAT.)

When adjusting the volume on the main unit
Set the VOL control on the remote control at maximum.

When adjusting the volume on the remote control
Set the VOL control on the main unit to around 6.

Operation on the remote control

To	Press
Switch playback to the other side	◀▶•■ more than a second during playback
Stop playback	◀▶•■ once during playback
Fast forward*	FF during stop
Rewind*	REW during stop
Play the other side from the beginning (Skip Reverse function)	FF for 2 seconds or more during stop
Play the same side from the beginning (Rewind Auto Play function)	REW for 2 seconds or more during stop
Repeat the current track (Repeat Single Track function)	◀▶•■ twice during playback *To stop a single repeat, press ◀▶•■ once*

Operation on the main unit

To	Do this
Switch playback to the other side	Press ◀▶•REPEAT during playback.
Stop playback	Press ■.
Fast forward*	Move the swing lever toward ⟶FF CUE once during stop.
Rewind*	Move the swing lever toward REVIEW REW⟵ once during stop.
Play the other side from the beginning (Skip Reverse function)	Move and hold the swing lever toward ⟶FF CUE for 2 seconds or more during stop.
Play the same side from the beginning (Rewind Auto Play function)	Move and hold the swing lever toward REVIEW REW⟵ for 2 seconds or more during stop.
Repeat the current track (Repeat Single Track function)	Press ◀▶•REPEAT for 2 seconds or more during playback. *To stop a single repeat, press it again.*

* If ◀▶•■ on the remote control is pressed during fast forward or rewind, the Walkman switches to playback.

Other tape operations

To play the next track/succeeding 9 tracks from the beginning (AMS*)
On the remote control: Press FF once / repeatedly during playback.
On the main unit: Move the swing lever toward ⟶FF CUE once / repeatedly during playback.

To play the current track/previous 8 tracks from the beginning (AMS*)
On the remote control: Press REW once / repeatedly during playback.
On the main unit: Move the swing lever toward REVIEW REW⟵ once / repeatedly during playback.

* Automatic Music Sensor

Fast forward/rewind while listening to the sound (CUE/REVIEW)
On the remote control: Press and hold FF / REW during playback and release it at the point you want.
On the main unit: Move and hold the swing lever toward ⟶FF CUE / REVIEW REW⟵ during playback and release it at the point you want.

Using Other Functions

Adjusting Playback Mode

You can adjust the playback direction mode (⟲ or ⤾) as well as the BL SKIP mode (on or off).

1 Press MODE repeatedly. With each press the indications change as follows:

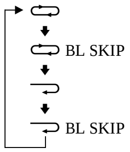

- When "BL SKIP" is displayed, the tape is fast-forwarded to the next track if there is a blank space of longer than 12 seconds. You will hear repeated sets of three short beeps when skipping a blank.
- When "⟲" is displayed, both sides of the tape is played repeatedly.
- When "⤾" is displayed, both sides of the tape is played once (if you start from R (REV) side, only REV side will be played).

Note
- You cannot adjust the playback mode during fast-forward or rewind.

Emphasizing Sound

1 Press SOUND repeatedly. With each press, the indications change as follows:
RV (Sound Revitalizer): emphasizes treble sound
MB (Mega Bass): emphasizes bass sound (moderate effect)
GRV (Groove): emphasizes bass sound (strong effect)
none: normal (no effect)

Notes
- If the sound is distorted with the mode "GRV", turn down the volume of the main unit or select other modes.
- You cannot change the mode during fast-forward or rewind.

Protecting Your Hearing — AVLS (Automatic Volume Limiter System)

Hold down MODE until "AVLS" appears in the display.
To cancel the AVLS function, hold down MODE again until "AVLS" disappears.

Note
- You cannot turn on / off the AVLS function during fast-forward or rewind.

Locking the Controls — HOLD Function

Slide the HOLD switch in the direction of the arrow to lock the controls of the Walkman or the remote control.

Downloaded from www.Manualslib.com manuals search engine

SECTION 3
DISASSEMBLY

Note : Follow the disassembly procedure as shown in the flow chart below.

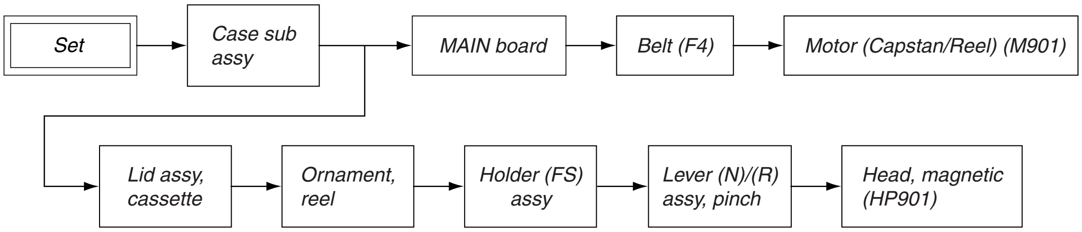

Note : Follow the disassembly procedure in the numerical order given.

3-1. CASE SUB ASSY

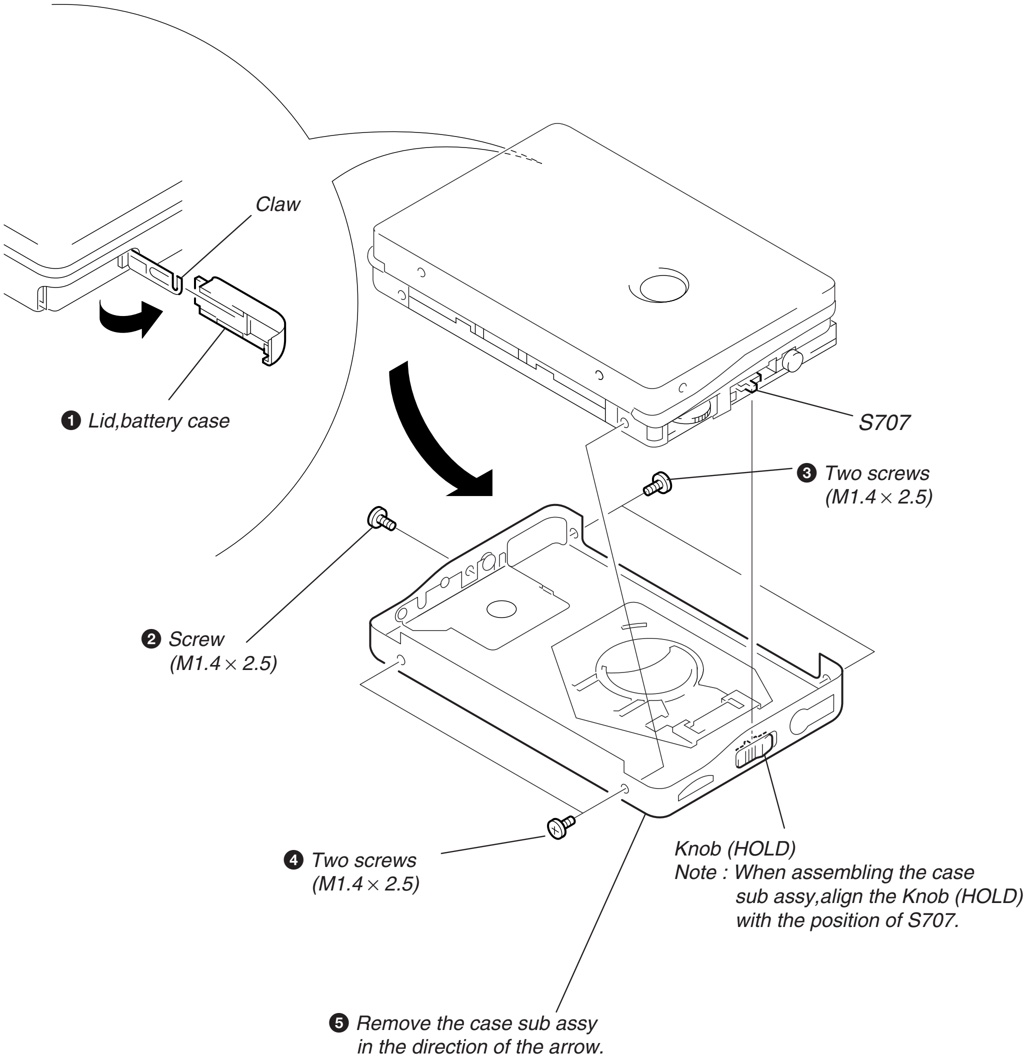

Downloaded from www.Manualslib.com manuals search engine

3-2. MAIN BOARD

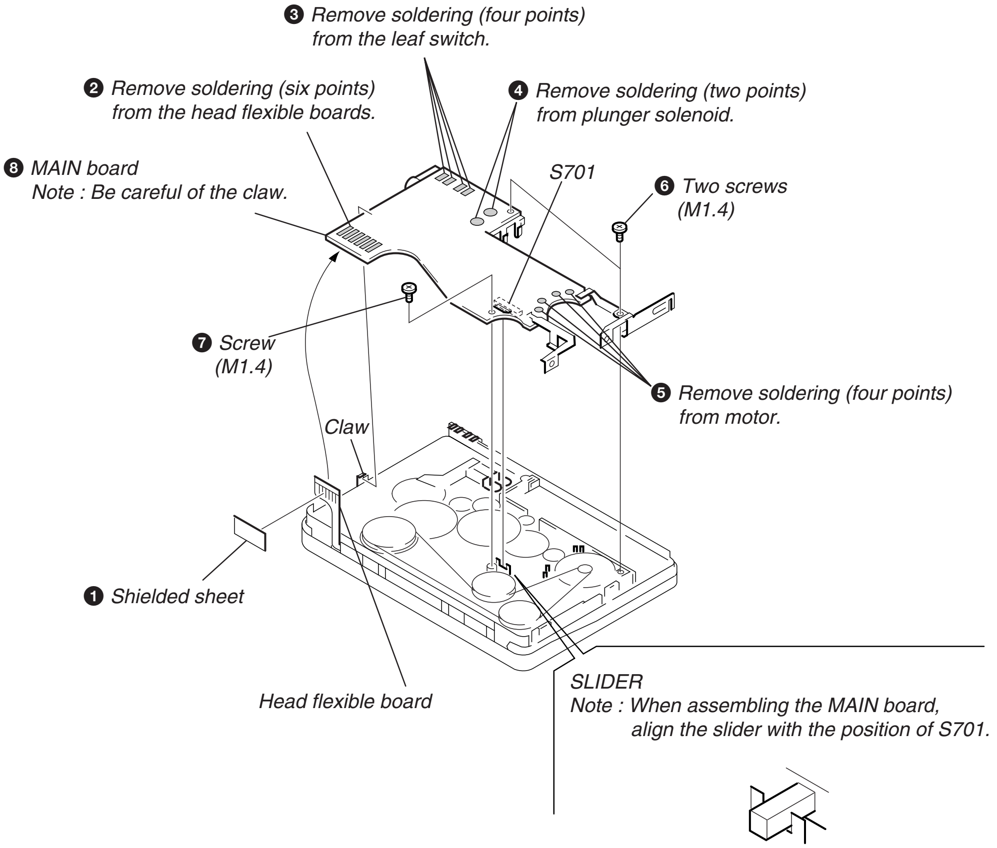

3-3. BELT (F4)

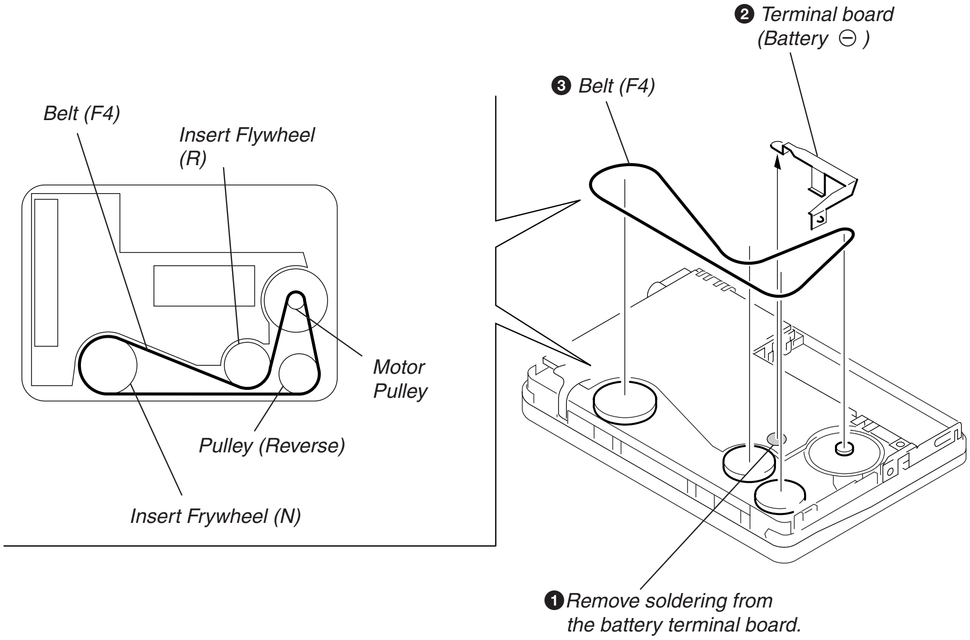

Downloaded from www.Manualslib.com manuals search engine

3-4. MOTOR (CAPSTAN/REEL) (M901)

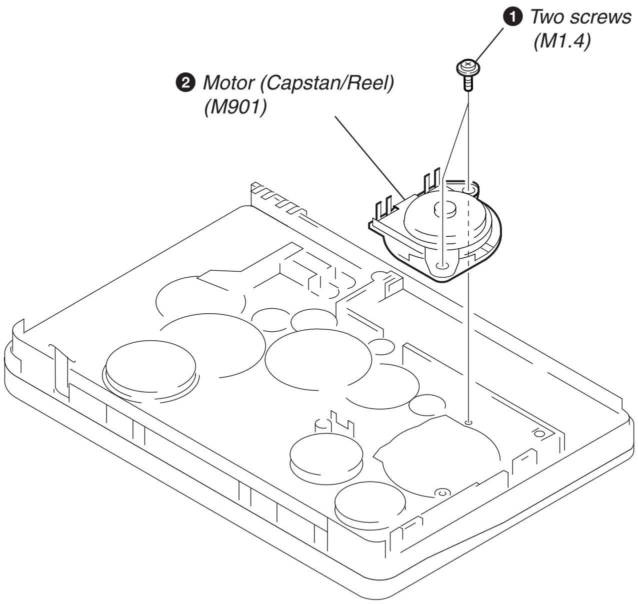

3-5. LID ASSY, CASSETTE

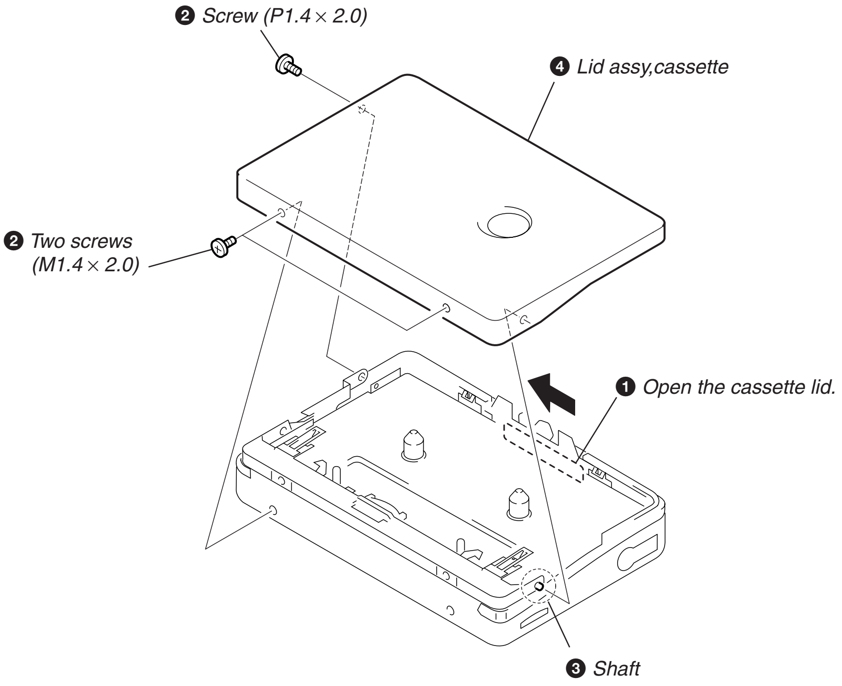

Downloaded from www.Manualslib.com manuals search engine

3-6. ORNAMENT, REEL

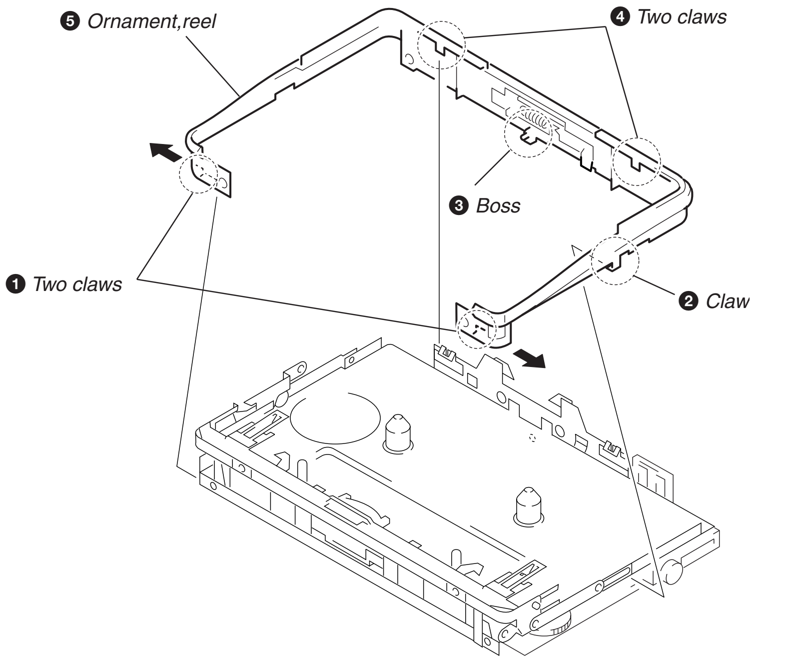

3-7. HOLDER (FS) ASSY

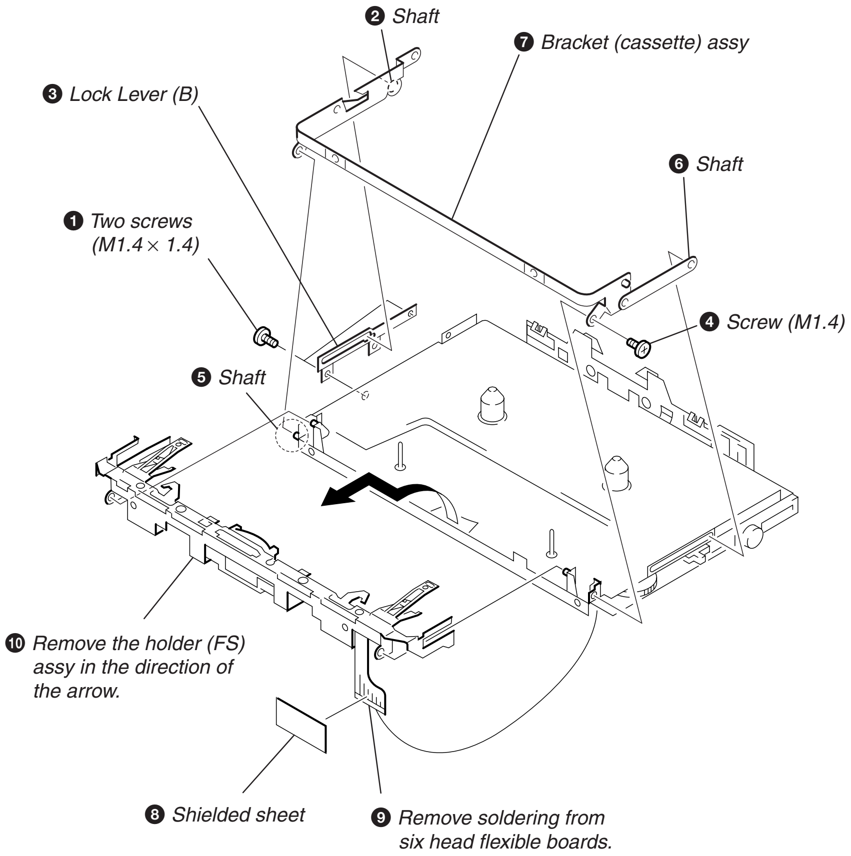

Downloaded from www.Manualslib.com manuals search engine

3-8. LEVER (N)/(R) ASSY, PINCH

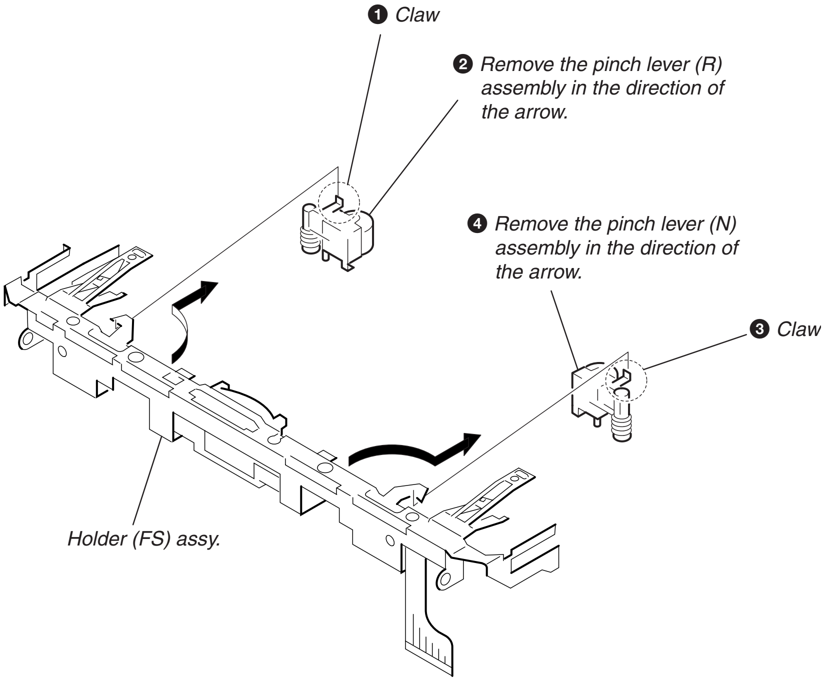

3-9. HEAD, MAGNETIC (HP901)

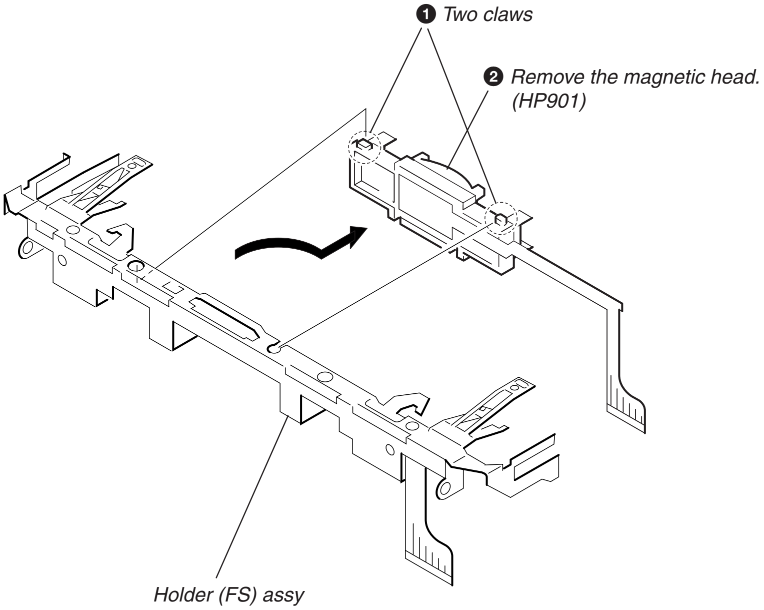

Downloaded from www.Manualslib.com manuals search engine

SECTION 4 MECHANICAL ADJUSTMENT

PRECAUTION

1. Clean the following parts with a denatured-alcohol-moistened swab:
   playback head   pinch roller
   rubber belts   capstan
2. Demagnetize the playback head with a head demagnetizer.
3. Do not use a magnetized screwdriver for the adjustments.
4. The adjustments should be performed with the rated power supply voltage unless otherwise noted.

• Torque Measurement

Mode	Torque Meter	Meter Reading
FWD	CQ-102D	14.7 to 24.5 mN•m (15 to 25 g•cm) (0.22 to 0.34 oz•inch)
FWD Back Tension	CQ-102D	0.294 to 1.96 mN•m (0.3 to 2.0g•cm) (0.007 to 0.020 oz•inch)
REW	CQ-102C	14.7 to 24.5 mN•m (15 to 25 g•cm) (0.22 to 0.34 oz•inch)
REW Back Tension	CQ-102C	0.294 to 1.96 mN•m (0.3 to 2.0 g•cm) (0.007 to 0.020 oz•inch)
FF, REW	CQ-201B	More than 34.3 mN•m (More than 35 g•cm) (More than 0.69 oz•inch)

SECTION 5 ELECTRICAL ADJUSTMENT

PRECAUTION

1. Specified voltage: 1.3 V (DC)
2. Switch position (MENU)
   AVLS : OFF
   BL SKIP : OFF
   MB/RV GRV : OFF

Test Tape

Tape	Signal	Used for
WS-48A	3 kHz, 0 dB	Tape Speed Adjustment

Tape Speed Adjustment
Procedure:

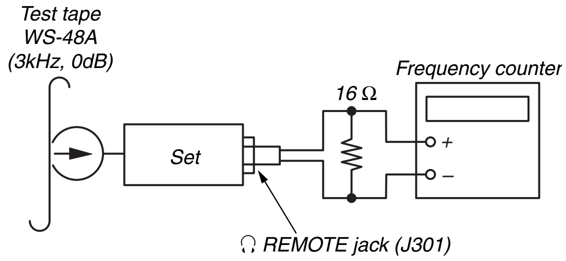

1. Enter the FWD playback mode.
2. Adjust RV601 so that the value of the frequency counter reading becomes 3,000 Hz.
   Specification value:

Frequency counter
2,970 Hz – 3,030 Hz

3. Check that the frequency deviation at the beginning and ending of a tape is within 1.5 % (45 Hz).

Adjustment Point:

[MAIN BOARD] — SIDE B —

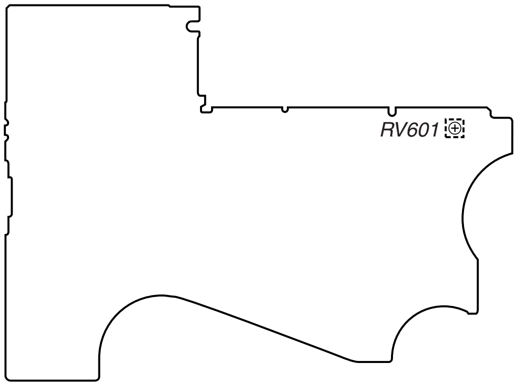

Downloaded from www.Manualslib.com manuals search engine

SECTION 6
DIAGRAMS

6-1. BLOCK DIAGRAM

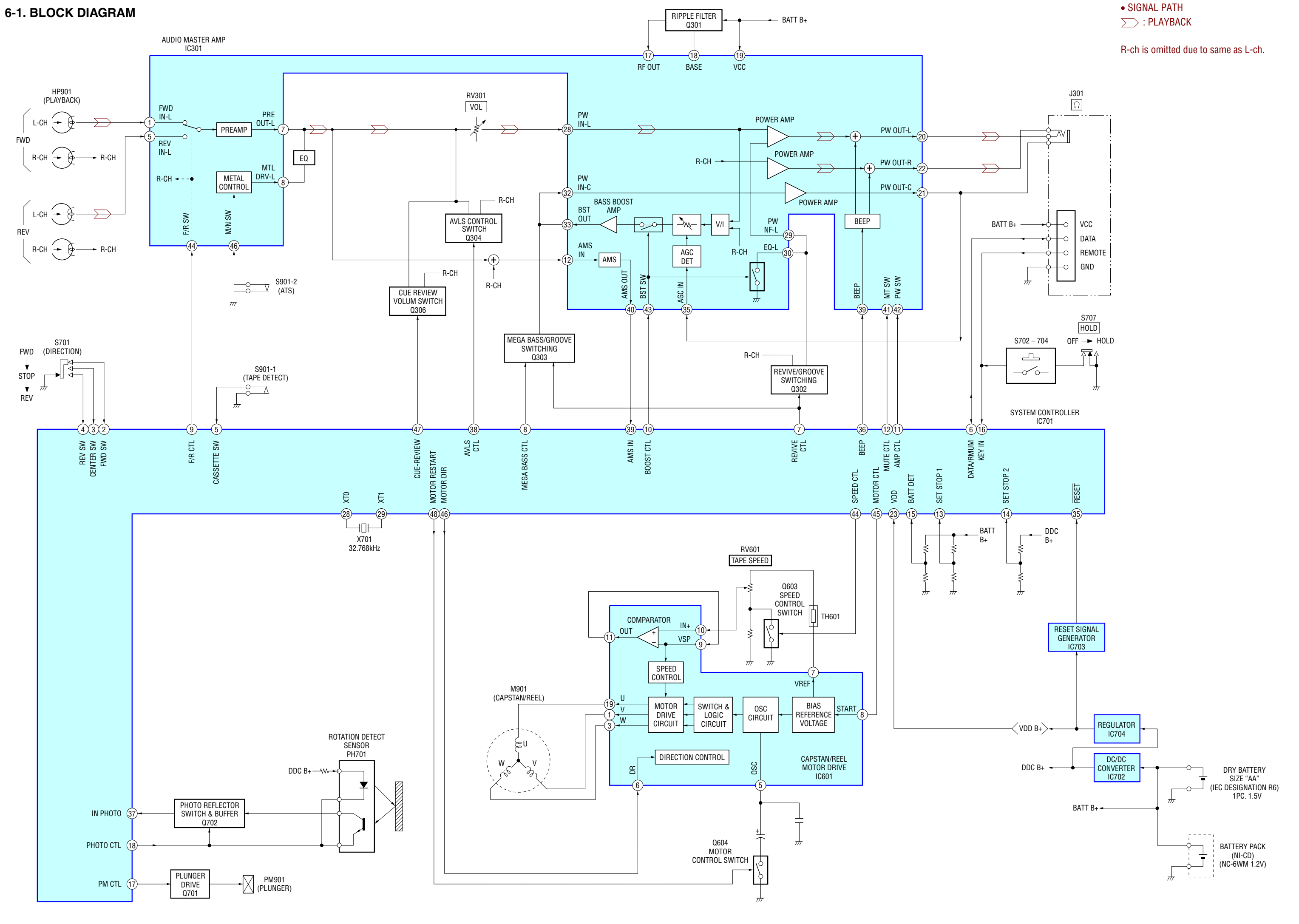

Downloaded from www.Manualslib.com manuals search engine

6-2. NOTE FOR PRINTED WIRING BOARDS AND SCHEMATIC DIAGRAMS.

Note on Printed Wiring Board:

- ○——— : parts extracted from the component side.
- ——— : parts extracted from the conductor side.
- ● : Through hole.
- ▬ : Pattern of the rear side.

Caution:	
Pattern face side: (SIDE B)	Parts on the pattern face side seen from the pattern face are indicated.
Parts face side: (SIDE A)	Parts on the parts face side seen from the parts face are indicated.

Note on Schematic Diagram:

- All capacitors are in µF unless otherwise noted. pF: µµF 50 WV or less are not indicated except for electrolytics and tantalums.
- % : indicates tolerance.
- ▭ : panel designation.
- ——— : B+ Line.
- ▭ : adjustment for repair.
- Power voltage is dc 1.5V and fed with regulated dc power supply from battery terminal.
  no mark : PB
- Waveforms are taken with a oscilloscope.
  Voltage variations may be noted due to normal production tolerances.
- Signal path.
  ⇒ : PB
- Abbreviation
  FR : French model

6-3. IC BLOCK DIAGRAMS

IC301 TA2123AF (EL)

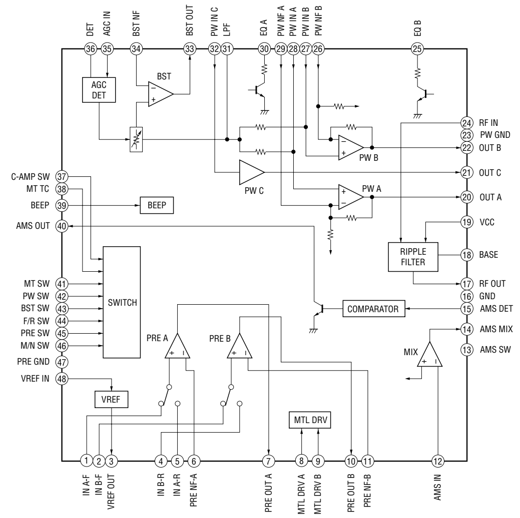

IC601 MM1279XVBE

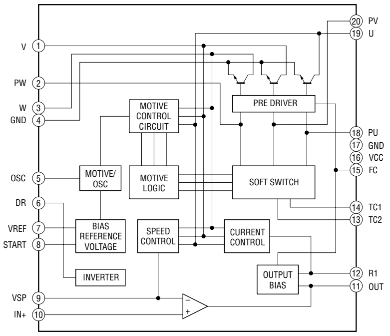

Downloaded from www.Manualslib.com manuals search engine

WM-EX621

6-4. SCHEMATIC DIAGRAM – MAIN BOARD –

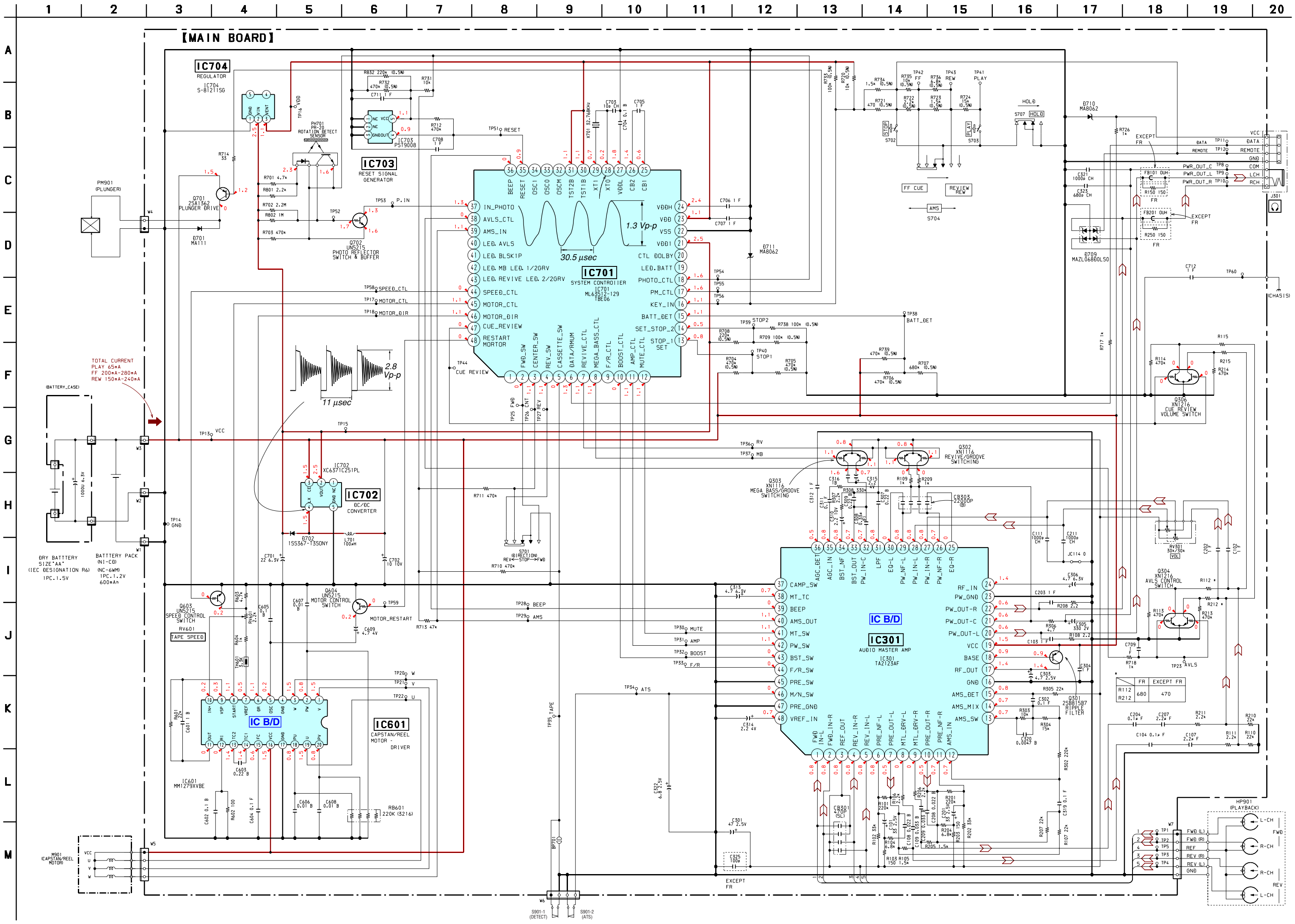

Downloaded from www.Manualslib.com manuals search engine

6-5. PRINTED WIRING BOARD – MAIN BOARD – • : Uses unleaded solder.

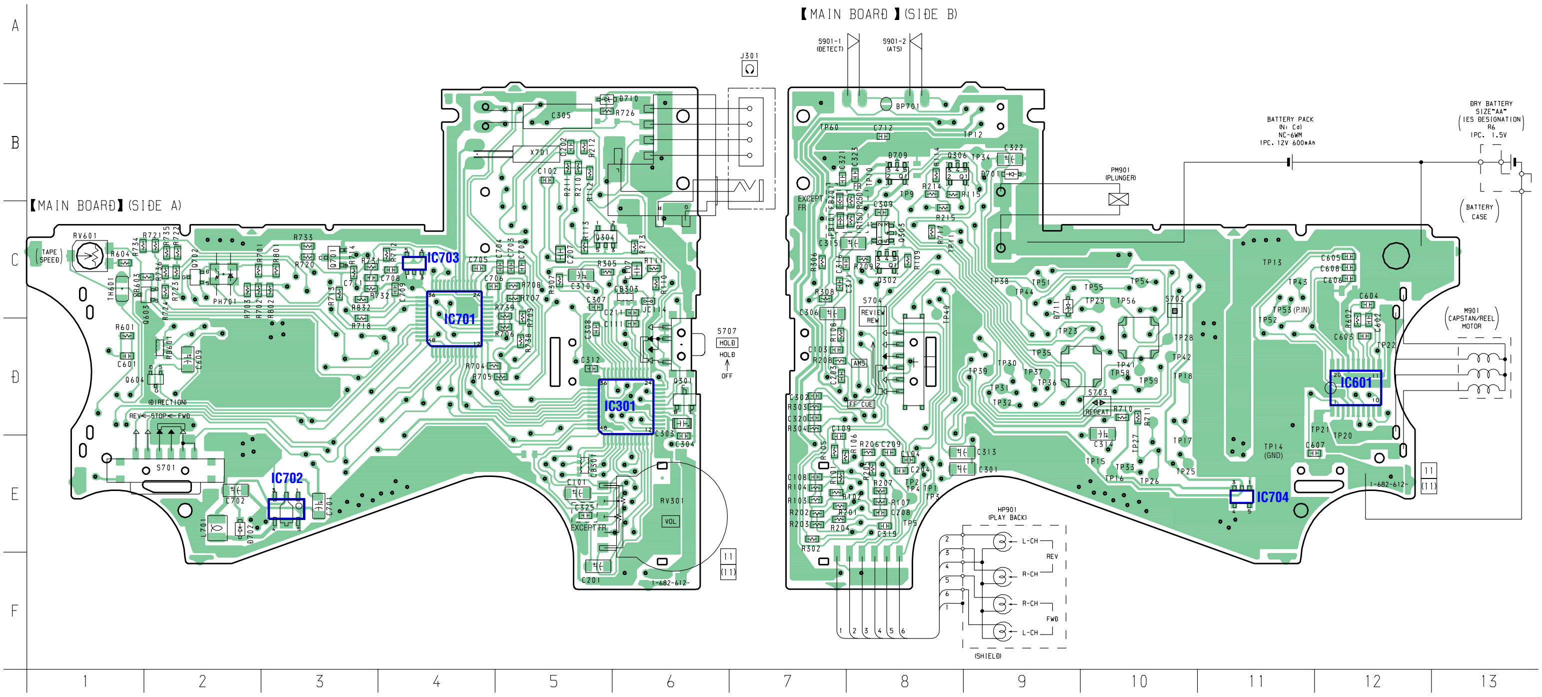

• **Semiconductor Location**

Ref. No.	Location	Ref. No.	Location	Ref. No.	Location	Ref. No.	Location
D701	B-9	IC301	D-6	Q301	D-6	Q604	D-1
D702	E-2	IC601	D-12	Q302	C-8	Q701	C-3
D709	B-8	IC701	C-4	Q303	C-8	Q702	C-2
D710	B-6	IC702	E-3	Q304	C-5		
D711	C-9	IC703	C-4	Q306	B-8		
		IC704	E-11	Q603	C-2		

Downloaded from www.Manualslib.com manuals search engine

6-6. IC PIN FUNCTION

- **MAIN BOARD IC701 ML63512-129TBZ060 (SYSTEM CONTROL)**

Pin No.	Pin Name	I/O	Description
1	N.C.	–	Not used
2	FWD SW	I	Detection switch (S701) input terminal “L”: FWD
3	CENTER SW	I	Detection switch (S701) input terminal “L”: CENTER
4	REV SW	I	Detection switch (S701) input terminal “L”: REV
5	CASSETTE SW	I	Cassette detection switch (S901-1) input terminal “L”: with cassette “H”: without cassette
6	DATA/RMUM	I/O	Serial data output of communication with the remote commander having phone, and the remote control sensing signal input from remote commander having phone
7	REVIVE CTL	O	Tone selection signal output to TA2123AF (IC301) “L”: REVIVE “H”: OFF/MEGA BASS/GROOVE
8	MEGA BASS CTL	O	Tone selection signal output to TA2123AF (IC301) “L”: MEGA BASS “H”: OFF/REVIVE/GROOVE
9	F/R CTL	O	FWD/REV selection signal output to TA2123AF (IC301) “L”: FWD “H”: REV (empty terminal)
10	BOOST CTL	O	Bass boost control signal output to TA2123AF (IC301) “L”: OFF “H”: ON
11	AMP CTL	O	Power supply ON/OFF control signal output to TA2123AF (IC301) “L”: power supply OFF “H”: power supply ON
12	MUTE CTL	O	Power mute control signal output to TA2123AF (IC301) “L”: mute ON “H”: mute OFF
13	SET STOP1	I	Battery voltage detection input terminal when the machine is stopped. (A/D input)
14	SET STOP2	I	Reference voltage input terminal when the machine is stopped. (A/D input)
15	BATT DET	I	Battery voltage detection input terminal (A/D input)
16	KEY IN	I	Key input terminal (A/D input)
17	PM CTL	O	Plunger drive signal output “L”: plunger ON
18	PHOTO CTL	O	Control signal output to the rotation detection circuit of the capstan/reel motor “L”: rotation detection circuit ON
19	LED BATT	O	LED drive signal output to BATT display “L”: LED ON (empty terminal)
20	DOLBY CTL	O	Dolby ON/OFF control signal output to Dolby NR amplifier “L”: Dolby NR, ON, H: Dolby NR OFF (empty terminal)
21	VDD1	–	Power supply terminal for external interface (+2.5 V)
22	VSS	–	Ground terminal
23	VDD	–	Power supply terminal (+1.5 V)
24	VDDH	–	Step-up power supply terminal for back-up
25	CB1	–	Terminal to which condenser for step-up power supply is connected
26	CB2	–	Terminal to which condenser for step-up power supply is connected
27	VDDL	–	Power supply terminal for internal logic
28	XT0	–	Terminal to which main system clock is connected (32.768 kHz)
29	XT1	–	Terminal to which main system clock is connected (32.768 kHz)
30	TAT1B	I	Test input terminal Normally, fixed to “H”.
31	TAT2B	I	Test input terminal Normally, fixed to “H”.
32	OSCM	–	Terminal to which external capacitor for oscillation is connected Not used in this machine (empty terminal)
33	OSC0	I	Terminal to which resistance for high-speed CR oscillation (800 kHz) is connected Not used in this machine (empty terminal)
34	OSC1	O	Terminal to which resistance for high-speed CR oscillation (800 kHz) is connected Not used in this machine (empty terminal)
35	$\overline{\text{RESET}}$	I	System reset signal input from the reset signal generator (IC703) “L”: reset “L” is input for several hundreds msec after power supply starts up, then “H” is input.
36	BEEP	O	Beep sound output to TA2123AF (IC301)
37	IN PHOTO	I	Rotation detection input of capstan/reel motor (M901)
38	AVLS CTL	O	AVLS ON/OFF control signal output “L”: AVLS OFF, “H”: AVLS ON

Downloaded from www.Manualslib.com manuals search engine

Pin No.	Pin Name	I/O	Description
39	AMS IN	I	AMS detection signal input from TA2123AF (IC301) “H”: No music
40	LED AVLS	O	Drive signal output for AVLS display Not used in this machine (empty terminal)
41	LED BLSKIP	O	Drive signal output for BL SKIP display Not used in this machine (empty terminal)
42	LED MB	O	Drive signal output for MG GRV display Not used in this machine (empty terminal)
43	LED REVIVE	O	Drive signal output for RV GRV display Not used in this machine (empty terminal)
44	SPEED CTL	O	Motor speed control signal output to capstan/reel motor drive IC (IC601) “L”: normal “H”: half speed
45	MOTOR CTL	O	Motor start control signal output to capstan/reel motor drive IC (IC601) “H”: motor ON
46	MOTOR DIR	O	Motor direction control signal output to capstan/reel motor drive IC (IC601) “L”: clockwise “H”: counter-clockwise
47	CVE REVIEW	O	Audio attenuation ON/OFF control signal output to TA2123AF (IC301) “L” : OFF “H” : ON (CUE/REVIEW)
48	MOTOR RESTART	O	Signal output for motor start-up status control to capstan/reel motor drive IC (IC601) “H”: during FF/REW motor rotating

Downloaded from www.Manualslib.com manuals search engine

SECTION 7
EXPLODED VIEWS

NOTE:
- -XX, -X mean standardized parts, so they may have some differences from the original one.
- Items marked "*" are not stocked since they are seldom required for routine service. Some delay should be anticipated when ordering these items.
- Color Indication of Appearance Parts Example:
  KNOB, BALANCE (WHITE) . . . (RED)
  ↑ Parts of Color ↑ Cabinet's Color
- The mechanical parts with no reference number in the exploded views are not supplied.

When indicating parts by reference number, please include the board name.

- Abbreviation
  FR : French model
  EE : East European model
  CH : Chinese model
  HK : Hong Kong model
  KR : Korean model
  JE : Tourist model

7-1. CABINET BLOCK

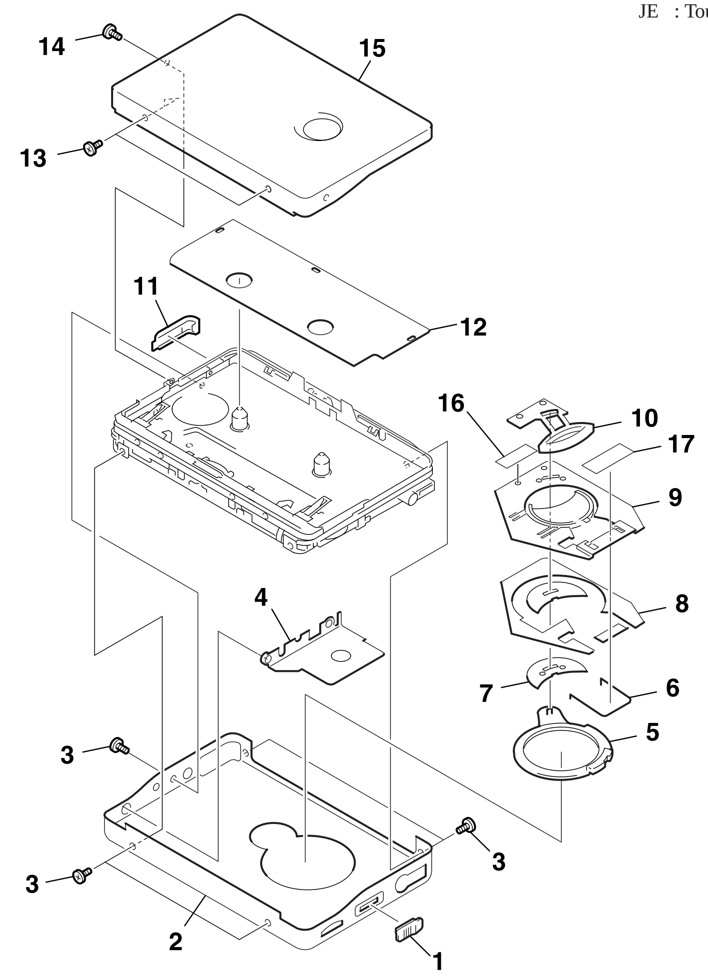

Ref. No.	Part No.	Description	Remarks
1	3-029-230-01	KNOB (HOLD)	
2	3-233-763-01	CASE (SILVER)	
2	3-233-763-11	CASE (BLUE)	
2	3-233-763-21	CASE (ORANGE)	
3	3-225-996-11	SCREW (M1.4)(EG),PRECISION PAN	
4	3-233-978-01	PLATE, ORNAMENTAL	
5	3-233-976-01	BUTTON (REW.FF)	
6	3-233-979-01	SPRING, CLICK	
7	3-234-098-01	BASE (SILVER)	
7	3-234-098-11	BASE (BLUE)	
7	3-234-098-21	BASE (ORANGE)	
8	3-233-977-01	SHEET (BUTTON), ADHESIVE	
9	3-233-975-01	BUTTON (PLAY)	
10	3-234-092-01	BUTTON (STOP)	
11	3-233-980-01	LID, BATTERY CASE (SILVER)	
11	3-233-980-11	LID, BATTERY CASE (BLUE)	
11	3-233-980-21	LID, BATTERY CASE (ORANGE)	
12	3-234-140-01	COVER, MD (JEW)	
12	3-234-140-11	COVER, MD (AEP,EE,FR,UK)	
12	3-234-140-21	COVER, MD (CH,HK,KR)	
13	3-225-996-09	SCREW (M1.4)(EG),PRECISION PAN	
14	3-704-197-11	SCREW (P1.4X2.0)	
15	X-3380-988-1	CASSETTE ASSY, LID (SILVER)	(AEP,CH,EE,FR,HK,JEW,UK)
15	X-3380-989-1	CASSETTE ASSY, LID (ORANGE)	(AEP,CH,EE,FR,HK,JEW,UK)
15	X-3380-990-1	CASSETTE ASSY, LID (BLUE)	(AEP,CH,EE,FR,HK,JEW,UK)
15	X-3381-250-1	CASSETTE ASSY, LID (SILVER) (KR)	
15	X-3381-251-1	CASSETTE ASSY, LID (ORANGE) (KR)	
15	X-3381-252-1	CASSETTE ASSY, LID (BLUE) (KR)	
16	3-233-977-01	SHEET (BUTTON), ADHESIVE	
17	3-939-581-01	CUSHION	

Downloaded from www.Manualslib.com manuals search engine

7-2. MAIN BOARD BLOCK

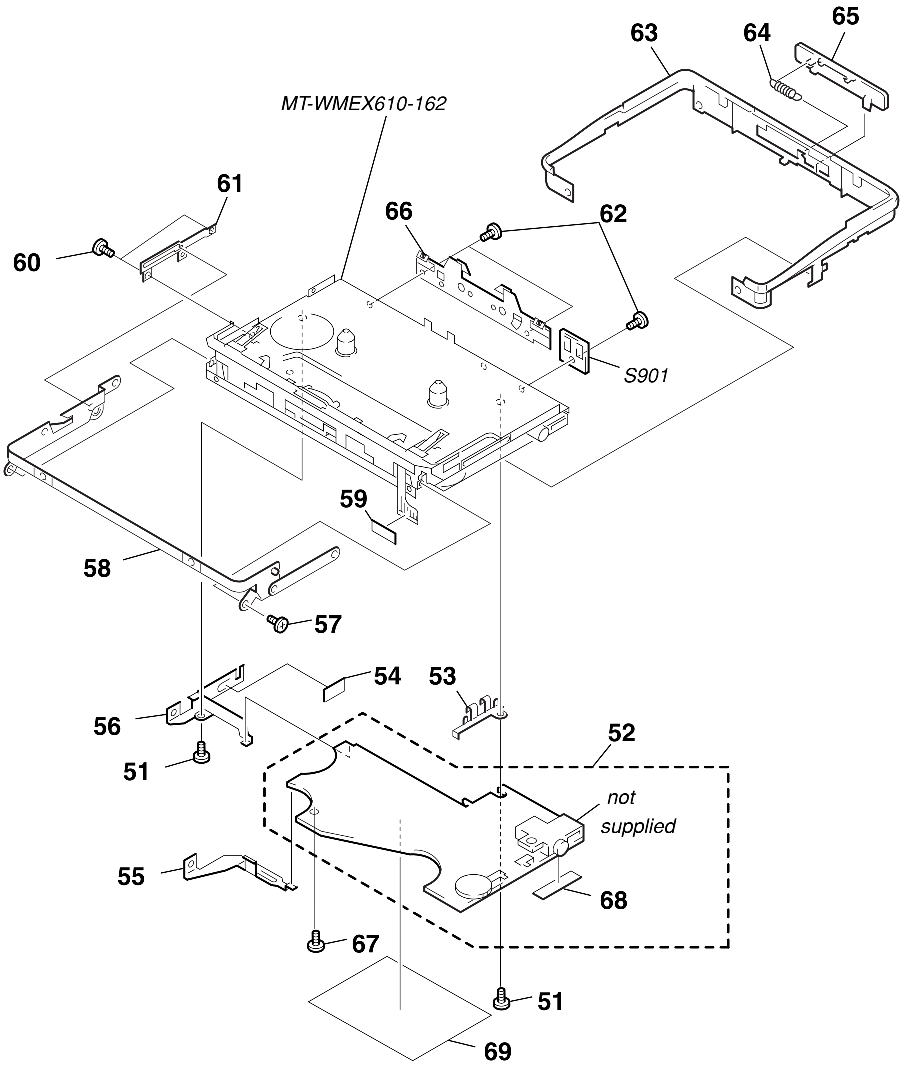

Ref. No.	Part No.	Description	Remarks
51	3-375-114-41	SCREW	
* 52	A-3021-537-A	MAIN PC BOARD ASSY	(AEP,CH,EE,HK,JEW,KR,UK)
* 52	A-3021-538-A	MAIN PC BOARD ASSY (FR)	
53	3-038-056-01	TERMINAL BOARD (MINUS)	
54	3-031-460-01	SHEET (BT)	
55	3-029-213-01	TERMINAL BOARD, BATTERY	
56	X-3377-726-1	TERMINAL BOARD ASSY	
57	3-365-630-41	SCREW (M1.4)	
58	X-3377-719-1	BRACKET (CASSETTE) ASSY	
59	3-309-595-11	SHEET, INSULATING, PACK	

Ref. No.	Part No.	Description	Remarks
60	3-939-590-05	SCREW (IB LOCK)	
61	3-038-054-01	LEVER (B), LOCK	
62	3-389-523-02	SCREW (IB LOCK)	
63	3-223-827-31	ORNAMENT,REEL (SILVER)	
63	3-223-827-41	ORNAMENT,REEL (BLUE)	
63	3-223-827-51	ORNAMENT,REEL (ORANGE)	
64	3-029-220-11	SPRING, TENSION	
65	3-222-732-21	KNOB (OPEN) (SILVER)	
65	3-222-732-31	KNOB (OPEN) (BLUE)	
65	3-222-732-41	KNOB (OPEN) (ORANGE)	
66	X-3377-717-1	BRACKET ASSY	
67	3-345-648-71	SCREW (M1.4), TOOTHED LOCK	
68	3-023-323-01	PAPER (A), SHIELD	
69	3-238-028-01	SHEET,PWB	
S901	1-762-553-11	SWITCH, LEAF (TAPE DETECT/ATS)	

Downloaded from www.Manualslib.com manuals search engine

7-3. MECHANISM BLOCK –1

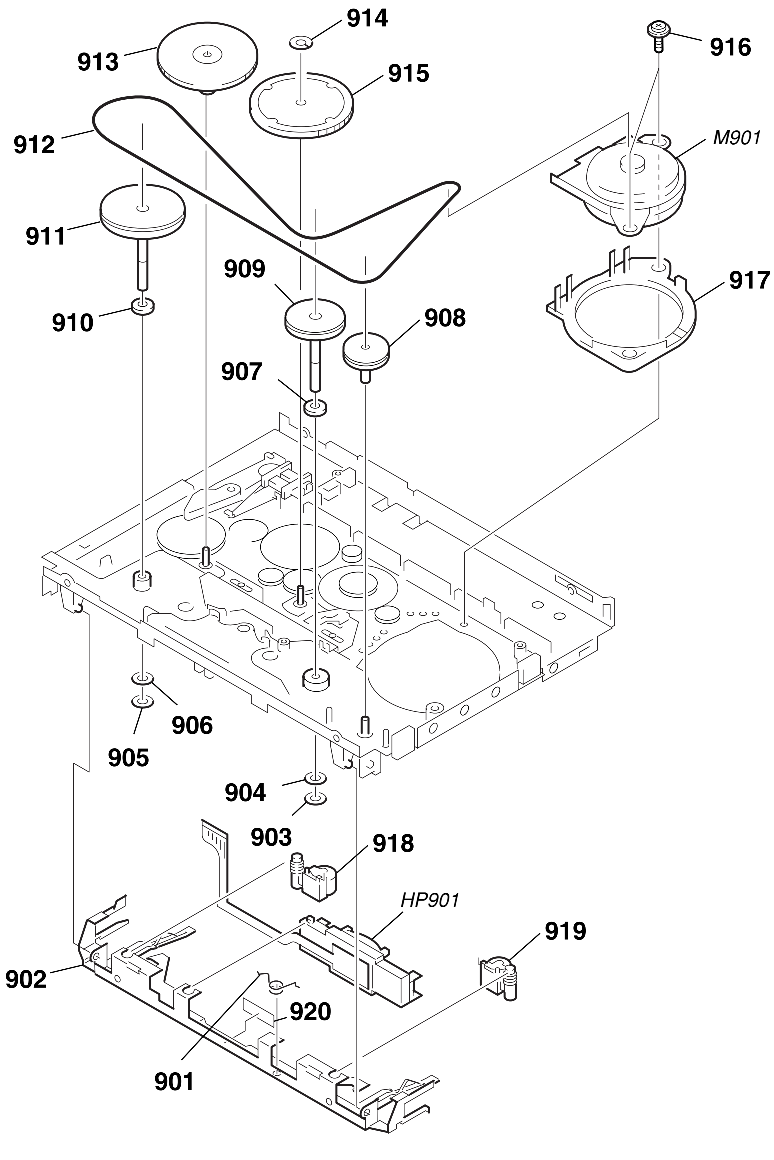

Ref. No.	Part No.	Description	Remarks
901	3-046-789-01	SPRING (HDA)	
902	X-3378-354-1	HOLDER (FS) ASSY	
903	3-029-275-01	WASHER (STOPPER N)	
904	3-029-278-01	WASHER	
905	3-029-276-01	WASHER (STOPPER R)	
906	3-029-289-01	WASHER	
907	3-007-428-01	WASHER (R)	
908	3-029-288-01	PULLEY, REVERSE	
909	3-029-268-11	FLYWHEEL (R), INSERT	
910	3-386-694-01	WASHER	
911	3-029-306-11	FLYWHEEL (N), INSERT	
912	3-220-035-01	BELT (F4)	
913	3-029-282-01	GEAR (Y)	
914	3-932-724-21	WASHER	
915	X-3376-813-1	CLUTCH ASSY (FM)	
916	3-029-765-01	SCREW (M1.4), TOOTHED LOCK	
917	3-029-274-01	RETAINER (F2), MOTOR	
918	X-3377-362-1	LEVER (N) ASSY, PINCH	
919	X-3377-363-1	LEVER (R) ASSY, PINCH	
920	3-033-757-01	SHEET (H)	
HP901	1-500-639-21	HEAD, MAGNETIC (PLAYBACK)	
M901	1-763-166-11	MOTOR (CAPSTAN/REEL)	

Downloaded from www.Manualslib.com manuals search engine

7-4. MECHANISM BLOCK –2

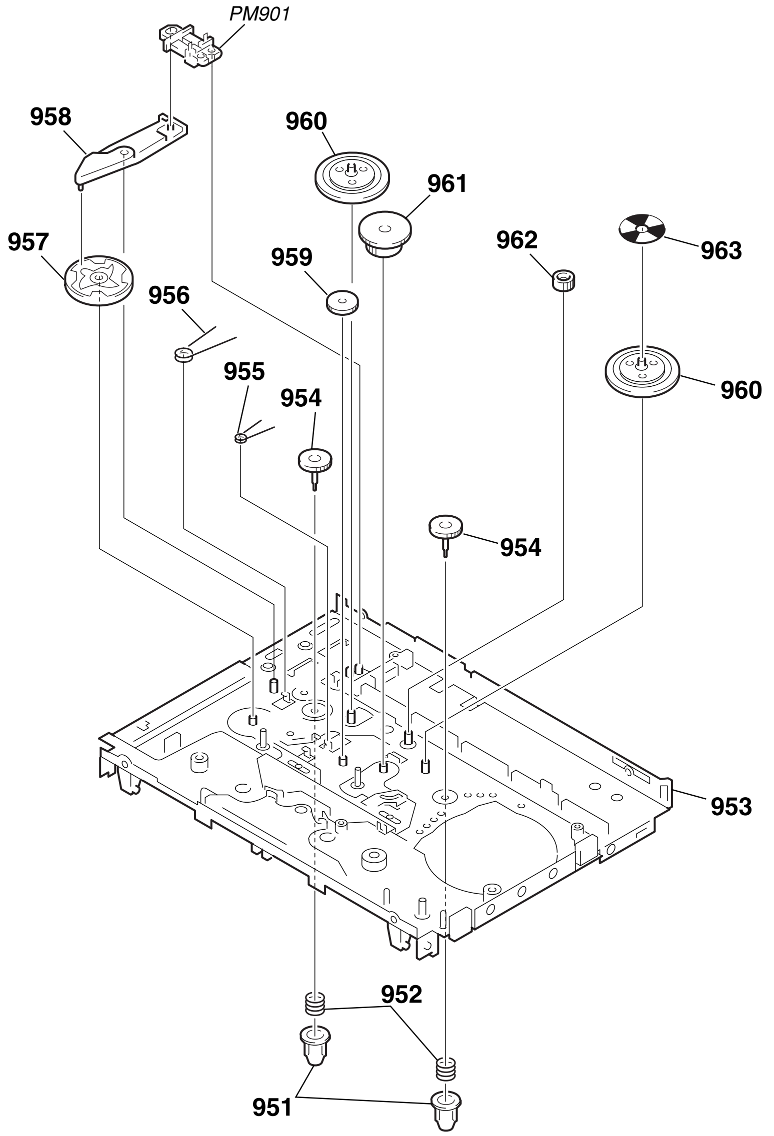

Ref. No.	Part No.	Description	Remarks
951	3-010-274-02	TABLE, REEL	
952	3-010-954-01	SPRING (BT), COMPRESSION	
953	X-3377-584-1	CHASSIS ASSY (F)	
954	3-010-273-02	GEAR (REEL)	
955	3-029-272-01	SPRING (FR), TORSION	
956	3-040-897-01	SPRING (TGA), TORSION	
957	3-029-285-12	GEAR, CAM	
958	3-029-284-01	LEVER, TRIGGER	
959	3-029-281-01	GEAR, IDLER (B)	
960	3-029-283-01	GEAR, IDLER (A)	
961	3-029-286-01	GEAR (NR)	
962	3-029-273-01	GEAR (FR)	
963	3-007-433-01	SHEET (N), REFLECTION	
PM901	1-454-674-31	SOLENOID, PLUNGER	

Downloaded from www.Manualslib.com manuals search engine

SECTION 8
ELECTRICAL PARTS LIST

NOTE:
- Due to standardization, replacements in the parts list may be different from the parts specified in the diagrams or the components used on the set.
- -XX, -X mean standardized parts, so they may have some difference from the original one.
- Items marked "*" are not stocked since they are seldom required for routine service. Some delay should be anticipated when ordering these items.
- CAPACITORS:
  uF: µF
- RESISTORS
  All resistors are in ohms.
  METAL: metal-film resistor
  METAL OXIDE: Metal Oxide-film resistor
  F: nonflammable
- COILS
  uH: µH
- SEMICONDUCTORS
  In each case, u: µ, for example:
  uA...: µA... , uPA... , µPA... ,
  uPB... , µPB... , uPC... , µPC... ,
  uPD..., µPD...

When indicating parts by reference number, please include the board name.

The components identified by mark ⚠ or dotted line with mark ⚠ are critical for safety.Replace only with part number specified.

以阴影和⚠标志来识别的零部件在安全方面具有关键性。因此只能以规定号码的零部件来更换。

- Abbreviation
  FR : French model
  EE : East European model
  CH : Chinese model
  HK : Hong Kong model
  KR : Korean model
  JE : Tourist model

Ref. No.	Part No.	Description			Remarks
*	A-3021-537-A	MAIN BOARD, COMPLETE (AEP,CH,EE,HK,JEW,KR,UK)			
		************************			
*	A-3021-538-A	MAIN BOARD, COMPLETE (FR)			
		**************************			
	3-032-323-01	PAPER (A), SHIELD			
		< CAPACITOR >			
C101	1-107-520-11	TANTAL. CHIP	33uF	20.00%	2.5V
C102	1-115-156-11	CERAMIC CHIP	1uF		10V
C103	1-115-156-11	CERAMIC CHIP	1uF		10V
C104	1-164-156-11	CERAMIC CHIP	0.1uF		25V
C107	1-164-505-11	CERAMIC CHIP	2.2uF		16V
C108	1-164-227-11	CERAMIC CHIP	0.022uF	10%	25V
C109	1-164-677-11	CERAMIC CHIP	0.033uF	10.00%	16V
C111	1-115-416-11	CERAMIC CHIP	0.001uF	5.00%	25V
C201	1-107-520-11	TANTAL. CHIP	33uF	20.00%	2.5V
C202	1-115-156-11	CERAMIC CHIP	1uF		10V
C203	1-115-156-11	CERAMIC CHIP	1uF		10V
C204	1-164-156-11	CERAMIC CHIP	0.1uF		25V
C207	1-164-505-11	CERAMIC CHIP	2.2uF		16V
C208	1-164-227-11	CERAMIC CHIP	0.022uF	10%	25V
C209	1-164-677-11	CERAMIC CHIP	0.033uF	10.00%	16V
C211	1-115-416-11	CERAMIC CHIP	0.001uF	5.00%	25V
C301	1-119-663-11	TANTAL. CHIP	47uF	20.00%	2.5V
C302	1-164-156-11	CERAMIC CHIP	0.1uF		25V
C303	1-125-926-95	TANTAL. CHIP	4.7uF	20.00%	2.5V
C304	1-115-156-11	CERAMIC CHIP	1uF		10V
C305	1-126-236-11	ELECT	330uF	20.00%	2V
C306	1-109-935-11	TANTAL. CHIP	4.7uF	20.00%	4V
C307	1-115-467-11	CERAMIC CHIP	0.22uF	10.00%	10V
C308	1-165-112-11	CERAMIC CHIP	0.33uF		16V
C309	1-115-467-11	CERAMIC CHIP	0.22uF	10.00%	10V
C310	1-135-149-11	TANTALUM CHIP	2.2uF	20%	10V
C311	1-164-156-11	CERAMIC CHIP	0.1uF		25V
C312	1-115-156-11	CERAMIC CHIP	1uF		10V
C313	1-109-935-11	TANTAL. CHIP	4.7uF	20.00%	4V
C314	1-135-187-21	TANTAL. CHIP	2.2uF	20.00%	4V
C315	1-135-187-21	TANTAL. CHIP	2.2uF	20.00%	4V
C316	1-125-837-11	CERAMIC CHIP	1uF	10%	6.3V
C319	1-164-156-11	CERAMIC CHIP	0.1uF		25V
C320	1-162-968-11	CERAMIC CHIP	0.0047uF	10%	50V
C321	1-115-416-11	CERAMIC CHIP	0.001uF	5.00%	25V
C322	1-109-937-11	TANTAL. CHIP	6.8uF	20.00%	2.5V
C323	1-115-412-11	CERAMIC CHIP	680PF	5.00%	25V
C325	1-162-927-11	CERAMIC CHIP	100PF	5%	50V
		(AEP,CH,EE,HK,JEW,KR,UK)			
C601	1-125-837-11	CERAMIC CHIP	1uF	10%	6.3V
C602	1-107-826-11	CERAMIC CHIP	0.1uF	10.00%	16V
C603	1-115-467-11	CERAMIC CHIP	0.22uF	10.00%	10V
C604	1-164-156-11	CERAMIC CHIP	0.1uF		25V
C605	1-107-826-11	CERAMIC CHIP	0.1uF	10.00%	16V
C606	1-162-970-11	CERAMIC CHIP	0.01uF	10%	25V
C607	1-162-970-11	CERAMIC CHIP	0.01uF	10%	25V
C608	1-162-970-11	CERAMIC CHIP	0.01uF	10%	25V
C609	1-135-151-21	TANTALUM CHIP	4.7uF	20%	4V
C701	1-119-750-11	TANTAL. CHIP	22uF	20.00%	6.3V
C702	1-104-851-11	TANTAL. CHIP	10uF	20.00%	10V
C703	1-162-915-11	CERAMIC CHIP	10PF	0.5PF	50V
C704	1-107-826-11	CERAMIC CHIP	0.1uF	10.00%	16V
C705	1-115-156-11	CERAMIC CHIP	1uF		10V
C706	1-115-156-11	CERAMIC CHIP	1uF		10V
C707	1-115-156-11	CERAMIC CHIP	1uF		10V
C708	1-115-156-11	CERAMIC CHIP	1uF		10V
C709	1-115-156-11	CERAMIC CHIP	1uF		10V
C711	1-115-156-11	CERAMIC CHIP	1uF		10V
C712	1-115-156-11	CERAMIC CHIP	1uF		10V
CB301	1-127-575-11	CAP, CHIP CERAMIC 470PF SL			
CB303	1-127-576-11	CAP, CHIP CERAMIC 22000PF B			
		< DIODE >			
D701	8-719-404-50	DIODE MA111-TX			
D702	8-719-049-09	DIODE 1SS367-T3SONY			
D709	8-719-068-83	DIODE MAZL068D0LS0-TX/L			
D710	8-719-422-58	DIODE MA8062-TX			
D711	8-719-422-58	DIODE MA8062-TX			
		< FERRITE BEAD >			
FB101	1-469-125-21	FERRITE 0UH (AEP,CH,EE,HK,JEW,KR,UK)			
FB201	1-469-125-21	FERRITE 0UH (AEP,CH,EE,HK,JEW,KR,UK)			
		< IC >			
IC301	8-759-579-12	IC TA2123AF (EL)			
IC601	8-759-356-46	IC MM1279XVBE			
IC701	6-800-619-01	IC ML63512-129TBZ060			
IC702	8-759-566-77	IC XC6371C251PL			
IC703	8-759-430-08	IC PST9008NL			
IC704	8-759-280-84	IC S-81211SG-QA-T1			

Downloaded from www.Manualslib.com manuals search engine

MAIN

Ref. No.	Part No.	Description			Remarks
		< JACK >			
J301	1-779-867-11	JACK (🎧)			
		< JANPER >			
JC114	1-216-864-11	METAL CHIP	0	5%	1/16W
		< COIL >			
L701	1-412-032-11	INDUCTOR CHIP	100uH		
		< PHOTO INTERRUPTER >			
PH701	8-749-014-43	PHOTO REFLECTOR PR-20-T			
		< TRANSISTOR >			
Q301	8-729-800-71	TRANSISTOR	2SB1295-UL6-TB		
Q302	8-729-423-75	TRANSISTOR	XN1116-TX		
Q303	8-729-423-75	TRANSISTOR	XN1116-TX		
Q304	8-729-421-23	TRANSISTOR	XN1216-TX		
Q306	8-729-421-23	TRANSISTOR	XN1216-TX		
Q603	8-729-420-50	TRANSISTOR	UN5215-(TX)		
Q604	8-729-420-50	TRANSISTOR	UN5215-(TX)		
Q701	8-729-230-72	TRANSISTOR	2SA1362-YG-ER		
Q702	8-729-420-50	TRANSISTOR	UN5215-(TX)		
		< RESISTOR >			
R101	1-216-849-11	METAL CHIP	220K	5%	1/16W
R102	1-216-839-11	METAL CHIP	33K	5%	1/16W
R103	1-216-811-11	METAL CHIP	150	5%	1/16W
R104	1-216-831-11	METAL CHIP	6.8K	5%	1/16W
R105	1-216-823-11	METAL CHIP	1.5K	5%	1/16W
R106	1-216-825-11	METAL CHIP	2.2K	5%	1/16W
R107	1-216-837-11	METAL CHIP	22K	5%	1/16W
R108	1-216-789-11	METAL CHIP	2.2	5%	1/16W
R109	1-216-821-11	METAL CHIP	1K	5%	1/16W
R110	1-216-837-11	METAL CHIP	22K	5%	1/16W
R111	1-216-825-11	METAL CHIP	2.2K	5%	1/16W
R112	1-216-819-11	METAL CHIP	680	5%	1/16W (FR)
R112	1-218-839-11	METAL CHIP	470	0.5%	1/10W (AEP,CH,EE,HK,JEW,KR,UK)
R113	1-216-853-11	METAL CHIP	470K	5%	1/16W
R114	1-216-853-11	METAL CHIP	470K	5%	1/16W
R115	1-216-815-11	METAL CHIP	330	5%	1/16W
R150	1-216-811-11	METAL CHIP	150	5%	1/16W (FR)
R201	1-216-849-11	METAL CHIP	220K	5%	1/16W
R202	1-216-839-11	METAL CHIP	33K	5%	1/16W
R203	1-216-811-11	METAL CHIP	150	5%	1/16W
R204	1-216-831-11	METAL CHIP	6.8K	5%	1/16W
R205	1-216-823-11	METAL CHIP	1.5K	5%	1/16W
R206	1-216-825-11	METAL CHIP	2.2K	5%	1/16W
R207	1-216-837-11	METAL CHIP	22K	5%	1/16W
R208	1-216-789-11	METAL CHIP	2.2	5%	1/16W
R209	1-216-821-11	METAL CHIP	1K	5%	1/16W
R210	1-216-837-11	METAL CHIP	22K	5%	1/16W
R211	1-216-825-11	METAL CHIP	2.2K	5%	1/16W
R212	1-216-819-11	METAL CHIP	680	5%	1/16W (FR)
R212	1-218-839-11	METAL CHIP	470	0.5%	1/10W (AEP,CH,EE,HK,JEW,KR,UK)

Ref. No.	Part No.	Description			Remarks
R213	1-216-853-11	METAL CHIP	470K	5%	1/16W
R214	1-216-853-11	METAL CHIP	470K	5%	1/16W
R215	1-216-815-11	METAL CHIP	330	5%	1/16W
R250	1-216-811-11	METAL CHIP	150	5%	1/16W (FR)
R302	1-216-849-11	METAL CHIP	220K	5%	1/16W
R303	1-216-833-11	METAL CHIP	10K	5%	1/16W
R304	1-216-835-11	METAL CHIP	15K	5%	1/16W
R305	1-216-837-11	METAL CHIP	22K	5%	1/16W
R306	1-216-793-11	RES-CHIP	4.7	5%	1/16W
R307	1-216-825-11	METAL CHIP	2.2K	5%	1/16W
R308	1-216-851-11	METAL CHIP	330K	5%	1/16W
R601	1-216-837-11	METAL CHIP	22K	5%	1/16W
R602	1-216-809-11	METAL CHIP	100	5%	1/16W
R603	1-216-829-11	METAL CHIP	4.7K	5%	1/16W
R604	1-216-821-11	METAL CHIP	1K	5%	1/16W
R701	1-216-829-11	METAL CHIP	4.7K	5%	1/16W
R702	1-216-861-11	METAL CHIP	2.2M	5%	1/16W
R703	1-216-853-11	METAL CHIP	470K	5%	1/16W
R704	1-218-911-11	METAL CHIP	470K	0.5%	1/10W
R705	1-218-911-11	METAL CHIP	470K	0.5%	1/10W
R706	1-218-911-11	METAL CHIP	470K	0.5%	1/10W
R707	1-218-915-11	METAL CHIP	680K	0.5%	1/10W
R708	1-218-903-11	METAL CHIP	220K	0.5%	1/10W
R709	1-218-895-11	METAL CHIP	100K	0.5%	1/10W
R710	1-216-853-11	METAL CHIP	470K	5%	1/16W
R711	1-216-853-11	METAL CHIP	470K	5%	1/16W
R712	1-216-853-11	METAL CHIP	470K	5%	1/16W
R713	1-216-841-11	METAL CHIP	47K	5%	1/16W
R714	1-216-803-11	METAL CHIP	33	5%	1/16W
R717	1-216-821-11	METAL CHIP	1K	5%	1/16W
R718	1-216-821-11	METAL CHIP	1K	5%	1/16W
R720	1-218-871-11	METAL CHIP	10K	0.5%	1/10W
R721	1-218-839-11	METAL CHIP	470	0.5%	1/10W
R722	1-218-855-11	METAL CHIP	2.2K	0.5%	1/10W
R723	1-218-851-11	METAL CHIP	1.5K	0.5%	1/10W
R724	1-218-875-11	METAL CHIP	15K	0.5%	1/10W
R726	1-216-821-11	METAL CHIP	1K	5%	1/16W
R731	1-216-833-11	METAL CHIP	10K	5%	1/16W
R732	1-218-911-11	METAL CHIP	470K	0.5%	1/10W
R733	1-218-895-11	METAL CHIP	100K	0.5%	1/10W
R734	1-218-851-11	METAL CHIP	1.5K	0.5%	1/10W
R735	1-218-871-11	METAL CHIP	10K	0.5%	1/10W
R736	1-218-867-11	METAL CHIP	6.8K	0.5%	1/10W
R738	1-218-895-11	METAL CHIP	100K	0.5%	1/10W
R739	1-218-911-11	METAL CHIP	470K	0.5%	1/10W
R801	1-216-825-11	METAL CHIP	2.2K	5%	1/16W
R802	1-216-857-11	METAL CHIP	1M	5%	1/16W
R832	1-218-903-11	METAL CHIP	220K	0.5%	1/10W
		< COMPOSITION CIRCUIT BLOCK >			
RB601	1-234-243-11	RES, NETWORK 220K (3216)			
		< VARIABLE RESISTOR >			
RV301	1-225-684-11	RES, VAR, CARBON 30K/30K (VOL)			
RV601	1-225-254-11	RES, ADJ, CARBON 2.2K (TAOE SPEED)			

Downloaded from www.Manualslib.com manuals search engine

Ref. No.	Part No.	Description	Remarks
		< SWITCH >	
S701	1-771-475-11	SWITCH, SLIDE (DERECTION)	
S702	1-771-053-11	SWITCH, KEY BOARD (■)	
S703	1-771-053-11	SWITCH, KEY BOARD (◀▶ REPEAT)	
S704	1-771-475-11	SWITCH, SLIDE (REVIEW REW ⟵ AMS ⟶ FF CUE)	
S707	1-572-922-11	SWITCH, SLIDE (HOLD)	
		< THERMISTOR >	
TH601	1-810-794-11	THERMISTOR, POSITIVE	
		< VIBRATOR >	
X701	1-767-386-21	VIBRATOR, CRYSTAL (32.768kHz)	

****

Ref. No.	Part No.	Description	Remarks
		MISCELLANEOUS	
		**************	
HP901	1-500-639-21	HEAD, MAGNETIC (PLAYBACK)	
M901	1-763-166-11	MOTOR	
PM901	1-454-674-31	SOLENOID, PLUNGER	
S901	1-762-553-11	SWITCH, LEAF (TAPE DETECT/ATS)	

****

Ref. No.	Part No.	Description	Remarks
		ACCESSORIES	
		************	
⚠	1-528-580-21	BATTERY CHARGER (BC-7HT) (JEW)	
⚠	1-528-661-15	BATTERY CHARGER (BC-7DR) (KR)	
⚠	1-528-744-21	BATTERY CHARGER (BC-7DY) (AEP,EE,FR)	
⚠	1-528-744-23	BATTERY CHARGER (BC-7DY) (AEP,EE,FR)	
⚠	1-528-822-13	BATTERY CHARGER (BC-7DN) (CH)	
⚠	1-756-115-11	CHARGER, BATTERY (BC-7SP2) (HK,UK)	
	1-528-299-41	BATTERY, NI-CD (NC-6WM) (AEP,EE,FR,UK)	
	1-528-543-11	BATTERY, NI-CD (NC-6WM) (CH,HK,KR)	
	1-528-543-22	BATTERY, NI-CD (NC-6WM) (JEW)	
	3-008-521-01	CASE, BATTERY CHARGE	
	1-759-700-21	CASE, BATTERY	
	8-954-008-91	RECEIVER,EAR MDR-E808SP	
	A-3052-265-A	REMOTE CONTROL ASSY (RM-WME23)	
	3-220-749-01	CASE, CARRYING	
⚠	1-569-007-11	ADAPTOR, CONVERSION 2P (JEW)	
	3-021-018-11	LABEL, FRANCE (FR)	
	3-234-046-01	MANUAL, INSTRUCTION (JAPANESE,ENGLISH,CHINESE,KOREAN) (JEW)	
	3-234-046-11	MANUAL, INSTRUCTION (ENGLISH,CHINESE,KOREAN) (CH,KR)	
	3-234-046-21	MANUAL, INSTRUCTION (SPANISH,PORTUGUESE,FRENCH,GERMAN) (AEP,FR)	
	3-234-046-31	MANUAL, INSTRUCTION (DUTCH,SWEDISH,ITALIAN,FINNISH) (AEP)	
	3-234-046-41	MANUAL, INSTRUCTION (ENGLISH,RUSSIAN) (AEP,EE,UK)	
	3-234-046-51	MANUAL, INSTRUCTION (CZECH,SLOVAK,HUNGARIAN,POLISH) (EE)	
	3-234-046-61	MANUAL, INSTRUCTION (ENGLISH,CHINESE) (HK)	

The components identified by mark ⚠ or dotted line with mark ⚠ are critical for safety. Replace only with part number specified.	以阴影和 ⚠ 标志来识别的零部件，在安全方面具有关键性．因此只能以规定号码的零部件来更换．

Downloaded from www.Manualslib.com manuals search engine

REVISION HISTORY

Clicking the version allows you to jump to the revised page.
Also, clicking the version at the upper right on the revised page allows you to jump to the next revised page.

Ver.	Date	Description of Revision
1.0	2001.10	New

Downloaded from www.Manualslib.com manuals search engine